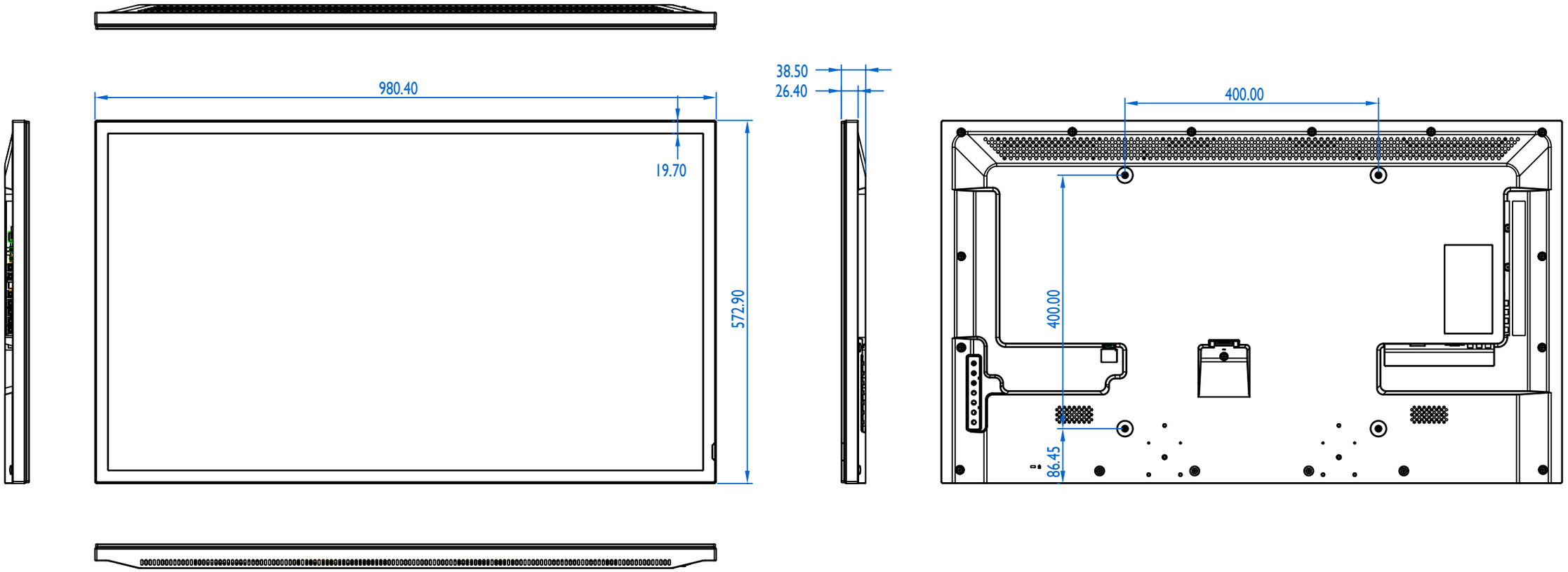

Date	Model
08/28/13	SL4250

PLANAR®

When image experience matters.